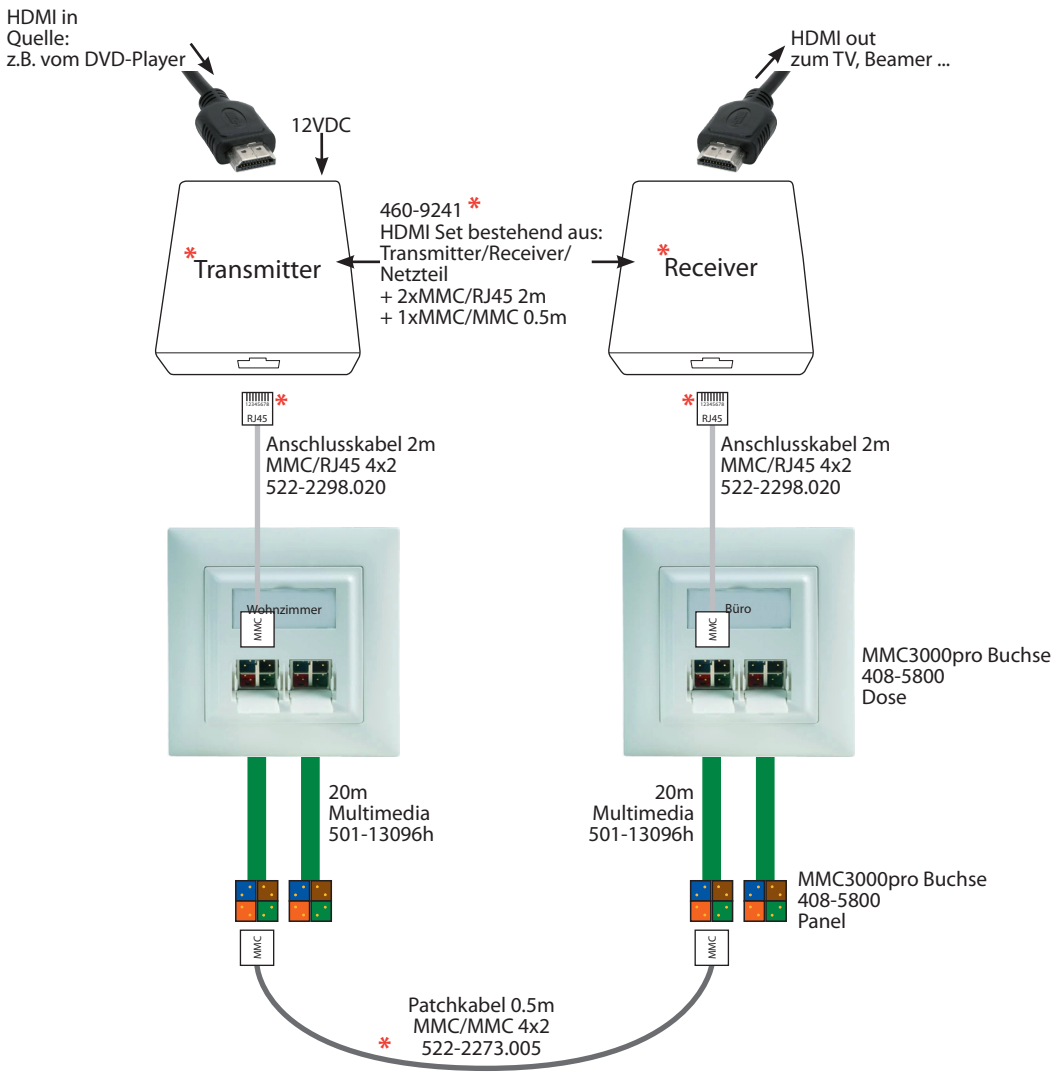HDMI (total 45m)